by ecerkom

ecerkom

ecerkom.com.tr


ecerkom

ecerkom

Methodology

Established in 2011, our company serves the manufacturing sector with an innovative and dynamic approach. Since our founding, we have been dedicated to analyzing industry needs and delivering high-quality, customized solutions. Leveraging our extensive technical expertise, we prioritize customer satisfaction by developing solution-oriented strategies for complex challenges. At Ecerkom, we stay at the forefront of technological advancement to ensure our production processes remain effective and up-to-date. By focusing on value-added projects, we continue to set ourselves apart and deliver excellence to our business partners. Quality is the cornerstone of our operations, meticulously integrated into every stage of production. By combining our deep industry knowledge with a commitment to sustainable growth, we remain a leader in continuous improvement.



Delivering Quality to Production, Building Trust for the Future!

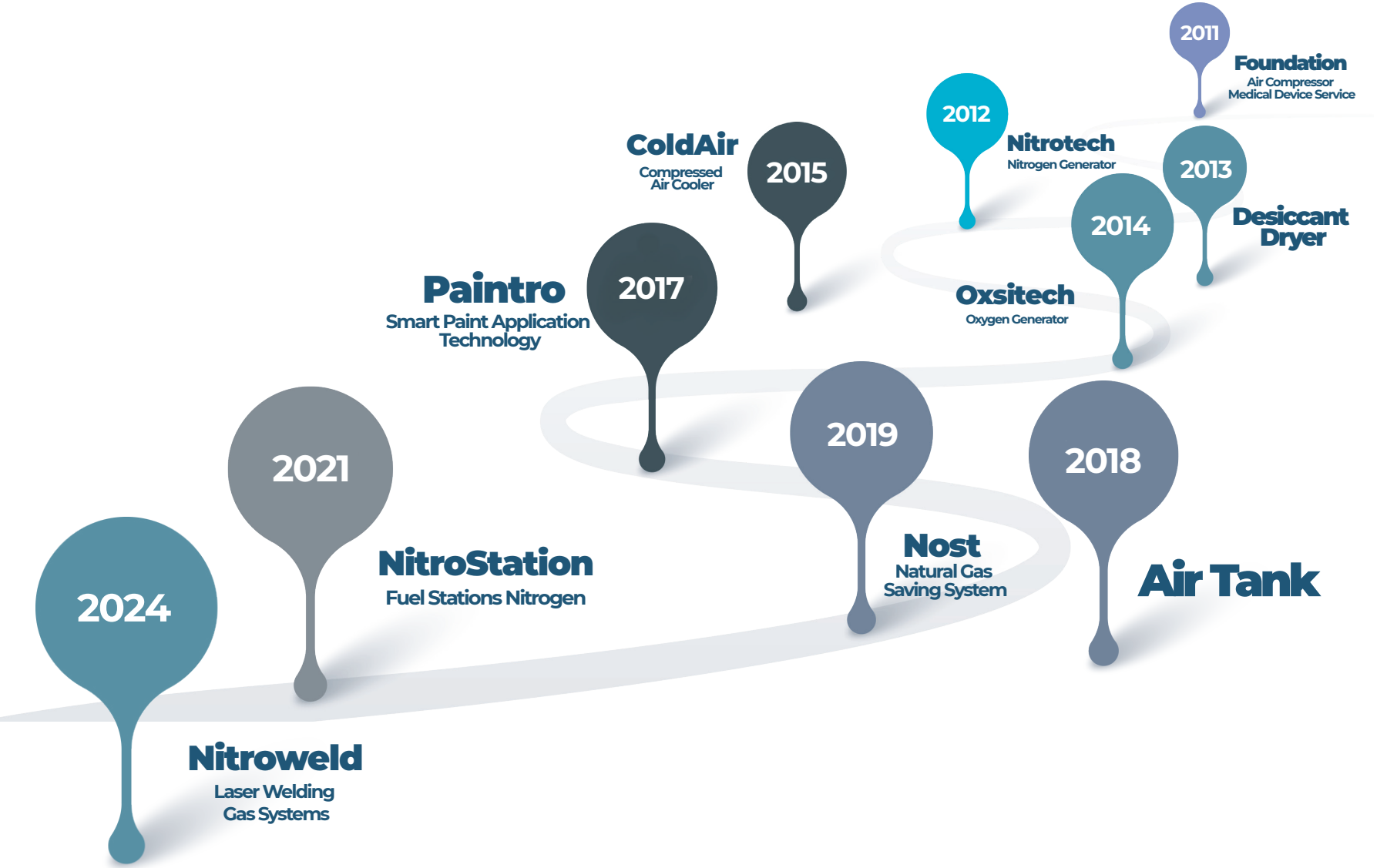
2011
Foundation
Air Compressor
Medical Device Service
2012
Nitrotech
Nitrogen Generator
2013
Desiccant
Dryer
2014
Oxsitech
Oxygen Generator
2015
ColdAir
Compressed
Air Cooler
2017
Paintro
Smart Paint Application
Technology
2018
Air Tank
2019
Nost
Natural Gas
Saving System
2021
NitroStation
Fuel Stations Nitrogen
2024
Nitroweld
Laser Welding
Gas Systems

ecerkom

Our Values

Customer Satisfaction

- We listen intently to our customers' challenges to deliver solutions that provide genuine value and long-term satisfaction.



Innovation

- We don't just adapt; we lead. By prioritizing research, development and a growth mindset, we constantly refine our processes and products.

Employee Participation

- Our strength lies in our people. We cultivate a transparent, equitable environment where teamwork and individual contributions are celebrated.

Business Ethics and Transparency

- We uphold the highest ethical standards in all operations, fostering long-term, trust-based partnerships through transparent management and honest communication.

Social Responsibility

- We recognize our responsibility to society, support environmental sustainability, and are committed to being a company that is responsive to social needs. Through continuous learning and development, we also strive to inspire new ideas.

Continuous Development

- We never stop evolving. By investing in the development of our people and refining our processes, we turn today's expertise into tomorrow's breakthroughs.

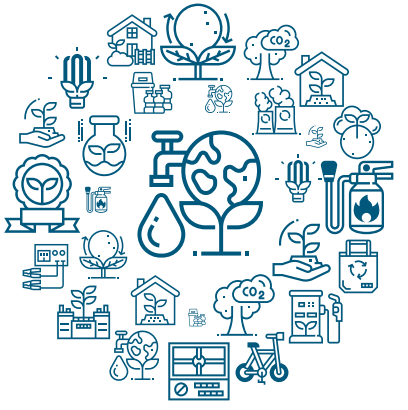

ecerkom

545 ecerkom 323 75 66 24/7

Technical Support

Our customers enjoy 24/7 access to professional technical support. From operational guidance to complex troubleshooting, our specialists are always available to ensure your production stays on track.

Customer Feedback

We believe the best products are built through collaboration. By systematically collecting and implementing customer feedback, we continuously evolve our services to meet the changing needs of the manufacturing sector.

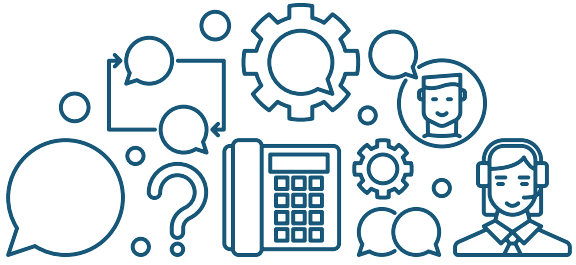

Spare Parts Supply

To ensure uninterrupted production and minimize downtime, we maintain a comprehensive inventory of spare parts for immediate dispatch. We ensure your machines consistently operate at their optimal capacity.



ecerkom
ACADEMY

Training Programs

We conduct specialized training programs for both clients and distributors to maximize operational efficiency. These sessions empower operators and maintenance teams with the technical expertise required to handle equipment safely and effectively.

ecerkom

Air Tank

At Ecerkom, we leverage extensive industry experience and a team of highly skilled specialists to manufacture premium low and high-pressure air tanks. Our products are fully CE-certified and engineered in complete compliance with PED 2014/68/EU standards. To ensure the highest levels of safety and operational integrity, every unit is delivered as a comprehensive package, including a formal CE certificate, hydrostatic test report, pressure gauge, safety valve, and drain valve.

Applications

Our low and high-pressure air tanks have a wide range of applications across various industrial sectors.

- Manufacturing and Assembly Facilities: Provides the necessary air pressure for the operation of pneumatic equipment and machinery.
- Automotive Industry: Used in air tools and assembly processes.
- Food & Beverage Industry: Used to provide hygienic air in production processes.
- Construction & Agriculture: Supports the operation of pneumatic tools.
- Energy Sector: Used in energy production and distribution.

Standard Features of Air Tanks

- Different Model Options: Horizontal and vertical models are available.
- Different Capacity Options: Available with working pressures of 11 bar, 16 bar, and 40 bar; hydrostatic tests are performed at 16.5 bar, 25 bar, and 60 bar before delivery to customers.
- Safety Features: Equipped with safety valve, pressure gauge, and drain valve.
- Long Service Life: Manufactured with high-quality materials and production standards.

Air Tank Technical Table

Volume	A	B	C	D	G	F	E	H	Pressure (bar)	Weight (kg)	Manhole
20 L	168	1.000	1.300	1/2”	1/4”	1/2”	1/2”	100	11 16 40	22 22 38	-
40 L	219	1.000	1.330	1/2”	1/4”	1/2”	1/2”	100	11 16 40	30 30 58	-
60 L	273	1.000	1.350	1/2”	1/4”	1/2”	1/2”	100	11 16 40	37 37 83	-
80 L	324	900	1.280	1/2”	1/4”	1/2”	1/2”	100	11 16 40	45 45 33	-
100 L	400	650	1.050	1/2”	1/4”	1/2”	1/2”	100	11 16 40	40 50 70	-
150 L	400	1.000	1.390	1/2”	1/4”	1/2”	1/2”	200	11 16 40	50 64 90	-
200 L	480	1.000	1.480	3/4”	1/4”	1/2”	1/2”	200	11 16 40	75 90 145	-
300 L	480	1.500	1.980	3/4”	1/4”	1/2”	1/2”	300	11 16 40	105 125 195	-
500 L	600	1.500	2.120	1”	1/4”	1/2”	1/2”	300	11 16 40	130 160 315	-
1.000 L	850	1.500	2.250	1 1/4”	1/2”	1/2”	1/2”	300	11 16 40	240 290 600	110x160
2.000 L	1.150	1.500	2.280	2”	1/2”	1/2”	1/2”	300	11 16 40	430 575 990	110x160
3.000 L	1.600	1.000	2.120	3”	1/2”	1”	1”	300	11 16	765 1135	320x420
4.000 L	1.600	1.500	2.620	3”	1/2”	1”	1”	300	11 16	925 1135	320x420
5.000 L	1.600	2.000	3.120	3”	1/2”	1”	1”	300	11 16	1080 1610	320x420

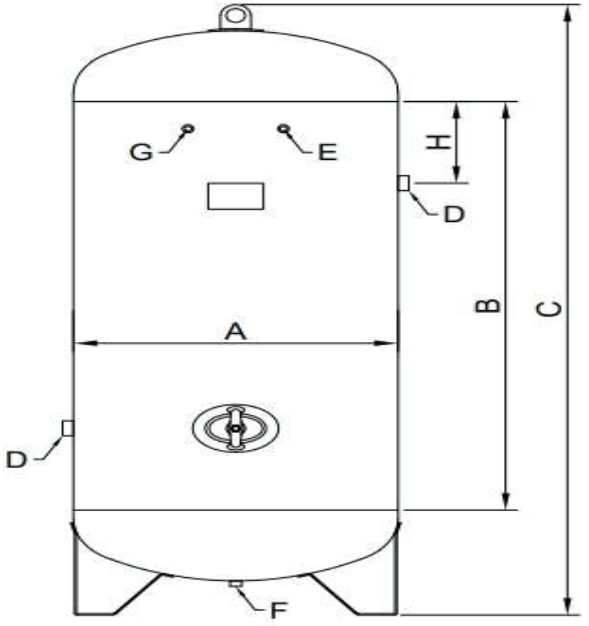
G
E
H
D
B
C
A
D
F



ecerkom

ECK SERIES







Desiccant Dryer

Ecerkom's desiccant dryers are designed to remove moisture from compressed air, offering high efficiency and reliability to optimize production processes. They are suitable for use across various industrial sectors and effectively minimize the adverse effects of moisture on operations.

Operating Principle

Ecerkom desiccant air dryers are adsorption-type dryers that operate based on the PSA (Pressure Swing Adsorption) principle. This technology effectively removes moisture to provide high-quality compressed air. Our PSA-based dryers can achieve dew points of -20 °C, -40 °C, and -70 °C. As the air passes through a chamber containing these chemical agents, moisture molecules are adsorbed by desiccant materials such as silica gel, alumina, and specialized polymers. As a result, dry air is produced, helping to prevent condensation and corrosion that could compromise the production process or contaminate the product.

ecerkom

ECK PLUS SERIES






DESICCANT DRYER


ACTIVATED CARBON TOWER
DESICCANT DRYER
DESICCANT DRYER

ecerkom

Moisture Removal Process

Industrial desiccant air dryers utilize high-performance chemical agents specifically engineered to extract moisture from compressed air through the process of adsorption. These advanced desiccant compounds attract and retain water molecules, ensuring a consistent, low-dew-point output that is essential for high-precision industrial applications.

Cycle Time

Our desiccant air dryers utilize a twin-tower configuration to ensure uninterrupted moisture removal. While one column is actively engaged in the adsorption cycle, the second column is taken offline for thermal or pressure-swing regeneration. By seamlessly alternating between these two towers, the system maintains a constant supply of dry compressed air, ensuring peak operational efficiency and 100% duty cycle reliability.

Automatic Control Systems

Ecerkom drying solutions are equipped with intelligent control interfaces that automate the air treatment process. With our optional moisture-sensing upgrades, the dryer dynamically adjusts its activity based on real-time ambient conditions. This proactive management ensures that the drying process only activates when necessary, delivering substantial energy savings and maximizing system-wide efficiency.

Key Features

- **High Efficiency:** Effectively removes moisture from compressed air, improving air quality. With a high moisture removal capacity, these devices ensure optimal air quality in industrial processes.
- **Low Energy Consumption:** Consumes less energy compared to traditional drying methods, providing cost savings. This offers an environmentally friendly solution while reducing energy expenses for businesses.
- **Easy Maintenance:** Thanks to its durable design that requires minimal maintenance, it provides advantages to operators. Ecerkom simplifies and speeds up maintenance processes with user-friendly designs.
- **Various Capacity Options:** Options include ECK16 bar, ECK20 bar, ECK50 bar, as well as custom capacity selections.

ECK SERIES
Heatless Desiccant Air Dryer

ECK SERIES HEATLESS DESICCANT AIR DRYER									
MODEL	Capacity		Conn. Size	Filter Type Inlet–Outlet	Dimensions			Voltage V/ph/Hz	Weight
	NL/min	Nm³/h			A	B	H		
ECK 48	800 L/min	48 m³/h	1/2"	ESF014 - EPF014	700 mm	550 mm	950 mm	230/1/50-60	80 Kg
ECK 78	1.300 L/min	78 m³/h	1/2"	ESF014 - EPF014	700 mm	550 mm	1.150 mm	230/1/50-60	95 Kg
ECK 96	1.600 L/min	96 m³/h	1/2"	ESF014 - EPF014	700 mm	550 mm	1350 mm	230/1/50-60	115 Kg
ECK 120	2.000 L/min	120 m³/h	3/4"	ESF018 - EPF018	700 mm	550 mm	1350 mm	230/1/50-60	115 Kg
ECK 138	2.300 L/min	138 m³/h	3/4"	ESF018 - EPF018	700 mm	550 mm	1550 mm	230/1/50-60	130 Kg
ECK 168	2.800 L/min	168 m³/h	1"	ESF040 - EPF040	700 mm	550 mm	1750 mm	230/1/50-60	145 Kg
ECK 210	3.500 L/min	210 m³/h	1"	ESF040 - EPF040	800 mm	600 mm	1400 mm	230/1/50-60	160 Kg
ECK 250	4.200 L/min	250 m³/h	1"	ESF040 - EPF040	800 mm	600 mm	1600 mm	230/1/50-60	180 Kg
ECK 290	4.800 L/min	290 m³/h	1"	ESF040 - EPF040	800 mm	600 mm	1800 mm	230/1/50-60	200 Kg
ECK 330	5.500 L/min	330 m³/h	1 1/2"	ESF075 - EPF075	800 mm	600 mm	2000 mm	230/1/50-60	220 Kg
ECK 390	6.500 L/min	390 m³/h	1 1/2"	ESF075 - EPF075	950 mm	650 mm	1600 mm	230/1/50-60	275 Kg
ECK 480	8.000 L/min	480 m³/h	1 1/2"	ESF075 - EPF075	950 mm	650 mm	1850 mm	230/1/50-60	305 Kg
ECK 575	9.600 L/min	575 m³/h	1 1/2"	ESF075 - EPF110	1.050 mm	700 mm	1650 mm	230/1/50-60	345 Kg
ECK 660	11.000 L/min	660 m³/h	2"	ESF160 - EPF160	1.050 mm	700 mm	1850 mm	230/1/50-60	380 Kg
ECK 780	13.000 L/min	780 m³/h	2"	ESF160 - EPF160	1.050 mm	700 mm	2150 mm	230/1/50-60	420 Kg
ECK 900	15.000 L/min	900 m³/h	2"	ESF160 - EPF160	1.060 mm	750 mm	1700 mm	230/1/50-60	485 Kg
ECK 1000	18.300 L/min	1.000 m³/h	2"	ESF210 - EPF210	1.300 mm	750 mm	1.800 mm	230/1/50-60	665 Kg
ECK 1300	21.600 L/min	1.300 m³/h	2"	ESF210 - EPF210	1.300 mm	750 mm	2.100 mm	230/1/50-60	740 Kg
ECK 1500	25.000 L/min	1.500 m³/h	3"	ESF300 - EPF300					
ECK 1800	30.000 L/min	1.800 m³/h	3"	ESF300 - EPF300					
ECK 2100	35.000 L/min	2.100 m³/h	3"	ESF400 - EPF400					
ECK 2600	43.300 L/min	2.600 m³/h	3"	ESF500 - EPF500					
ECK 3300	55.000 L/min	3.300 m³/h	3"	EFSF600 - EFPF600					
ECK 3900	65.000 L/min	3.900 m³/h	4"	EFSF800 - EFPF800					
ECK 4800	80.000 L/min	4.800 m³/h	4"	EFSF800 - EFPF800					
ECK 5500	91.600 L/min	5.500 m³/h	4"	EFSF800 - EFPF800					

Request Information

Correction Factor													
Pressure (Bar)	4,0	5,0	6,0	7,0	8,0	9,0	10,0	11,0	12,0	13,0	14,0	15,0	16,0
Pk	0,60	0,74	0,89	1,00	1,11	1,22	1,36	1,50	1,63	1,75	1,90	2,03	2,14

Temperature °C	<20	25	30	35	38	40	45	48	50
Tk	1,20	1,10	1,09	1,00	0,84	0,78	0,72	0,65	0,58

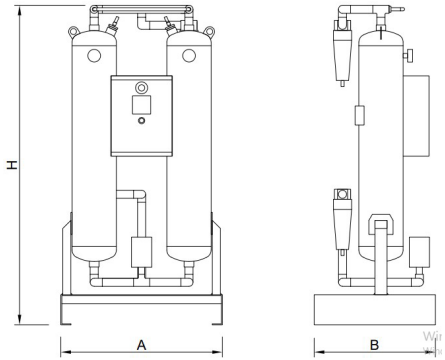

NOTES
- Compressed Air Flow: 20 °C (1 Bar Free Normal Air)
- Calculated Air Temperature: 35 °C (Correction Factor)
- Max. Operating Pressure: 16 bar
- Design Pressure: 7 bar
- Dew Point: -40 °C
- Max. Ambient Temperature: 50 °C
- Max. Air Temperature: 50 °C
- Standard Accessories: **Inlet and outlet filters included.**
- Power Requirement: 230 V, 1 ph, 50–60 Hz

Sample Product Selection:
If the required capacity is 1800 Nl/min and the system operates at 9 bar pressure and 45°C inlet temperature, the dryer is selected as follows:
1800 / 1.22 / 0.72 = 2049.18 Nl/min
The correct dryer model to be selected is ECK-138.

ECK PLUS SERIES

ECK Plus Desiccant Air Dryer
Heatless + Integrated Activated Carbon Tower

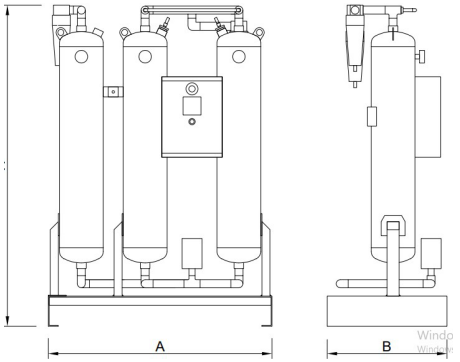

NOTES

- Compressed Air Flow: 20 °C (1 Bar Free Normal Air)
- Calculated Air Temperature: 35 °C (Correction Factor)
- Max. Operating Pressure: 16 bar
- Design Pressure: 7 bar
- Dew Point: -40 °C
- Max. Ambient Temperature: 50 °C
- Max. Air Temperature: 50 °C
- Standard Accessories: **Inlet and outlet filters included.**
- Power Requirement: 230 V, 1 ph, 50–60 Hz

Sample Product Selection:
If the required capacity is 1800 Nl/min and the system operates at 9 bar pressure and 45°C inlet temperature, the dryer is selected as follows:
1800 / 1.22 / 0.72 = 2049.18 Nl/min
The correct dryer model to be selected is ECK-138 Plus.

ECK PLUS SERIES HEATLESS DESICCANT AIR DRYER + INTEGRATED ACTIVATED CARBON TOWER

MODEL	Capacity		Conn. Size	Filter Type Inlet–Outlet	Dimensions			Voltage V/ph/Hz	Weight
	NL/min	Nm³/h			A	B	H		
ECK 48	800 L/min	48 m³/h	1/2"	ESF014 - EPF014	900 mm	550 mm	950 mm	230/1/50-60	115 Kg
ECK 78	1.300 L/min	78 m³/h	1/2"	ESF014 - EPF014	900 mm	550 mm	1.150 mm	230/1/50-60	135 Kg
ECK 96	1.600 L/min	96 m³/h	1/2"	ESF014 - EPF014	960 mm	550 mm	1.350 mm	230/1/50-60	155 Kg
ECK 120	2.000 L/min	120 m³/h	3/4"	ESF018 - EPF018	960 mm	550 mm	1.550 mm	230/1/50-60	180 Kg
ECK 138	2.300 L/min	138 m³/h	3/4"	ESF018 - EPF018	960 mm	550 mm	1.750 mm	230/1/50-60	200 Kg
ECK 168	2.800 L/min	168 m³/h	1"	ESF040 - EPF040	1.020 mm	600 mm	1.400 mm	230/1/50-60	215 Kg
ECK 210	3.500 L/min	210 m³/h	1"	ESF040 - EPF040	1.020 mm	600 mm	1.600 mm	230/1/50-60	245 Kg
ECK 250	4.200 L/min	250 m³/h	1"	ESF040 - EPF040	1.020 mm	600 mm	1.800 mm	230/1/50-60	270 Kg
ECK 290	4.800 L/min	290 m³/h	1"	ESF040 - EPF040	1.020 mm	600 mm	2.000 mm	230/1/50-60	305 Kg
ECK 330	5.500 L/min	330 m³/h	1 1/2"	ESF075 - EPF075	1.350 mm	650 mm	1.600 mm	230/1/50-60	360 Kg
ECK 390	6.500 L/min	390 m³/h	1 1/2"	ESF075 - EPF075	1.350 mm	650 mm	1.850 mm	230/1/50-60	400 Kg
ECK 480	8.000 L/min	480 m³/h	1 1/2"	ESF075 - EPF075	1.450 mm	700 mm	1.650 mm	230/1/50-60	465 Kg
ECK 575	9.600 L/min	575 m³/h	1 1/2"	ESF075 - EPF110	1.450 mm	700 mm	1.850 mm	230/1/50-60	515 Kg
ECK 660	11.000 L/min	660 m³/h	2"	ESF160 - EPF160	1.450 mm	700 mm	2.150 mm	230/1/50-60	555 Kg
ECK 780	13.000 L/min	780 m³/h	2"	ESF160 - EPF160	1.660 mm	750 mm	1.700 mm	230/1/50-60	665 Kg
ECK 900	15.000 L/min	900 m³/h	2"	ESF160 - EPF160	1.660 mm	750 mm	1.900 mm	230/1/50-60	745 Kg
ECK 1000	18.300 L/min	1.000 m³/h	2"	ESF210 - EPF210	1.900 mm	750 mm	1.800 mm	230/1/50-60	890 Kg
ECK 1300	21.600 L/min	1.300 m³/h	2"	ESF210 - EPF210	1.900 mm	750 mm	2.100 mm	230/1/50-60	995 Kg
ECK 1500	25.000 L/min	1.500 m³/h	3"	ESF300 - EPF300	Request Information				
ECK 1800	30.000 L/min	1.800 m³/h	3"	ESF300 - EPF300					
ECK 2100	35.000 L/min	2.200 m³/h	3"	ESF400 - EPF400					
ECK 2600	43.300 L/min	2.600 m³/h	3"	ESF500 - EPF500					
ECK 3300	55.000 L/min	3.300 m³/h	4"	EFSF600 - EFPF600					
ECK 3900	65.000 L/min	3.900 m³/h	4"	EFSF800 - EFPF800					
ECK 4800	80.000 L/min	4.800 m³/h	4"	EFSF800 - EFPF800					
ECK 5500	91.600 L/min	5.500 m³/h	4"	EFSF800 - EFPF800					

ECK SERIES / 20 BAR

Heatless Desiccant Air Dryer

20 BAR ECK SERIES HEATLESS DESICCANT AIR DRYER									
MODEL	Capacity		Conn. Size	Filter Type Inlet–Outlet	Dimensions			Voltage V/ph/Hz	Weight
	NL/min	Nm³/h			A	B	H		
ECK 1500/20	1.500 L/min	90 m³/h	1/2"	ESF014 - EPF014	700 mm	550 mm	950 mm	230/1/50-60	90 Kg
ECK 2400/20	2.400 L/min	144 m³/h	1/2"	ESF014 - EPF014	700 mm	550 mm	1.150 mm	230/1/50-60	105 Kg
ECK 3000/20	3.000 L/min	180 m³/h	1/2"	ESF014 - EPF014	700 mm	550 mm	1.350 mm	230/1/50-60	125 Kg
ECK 3700/20	3.700 L/min	225 m³/h	3/4"	ESF018 - EPF018	700 mm	550 mm	1.550 mm	230/1/50-60	140 Kg
ECK 4500/20	4.500 L/min	270 m³/h	3/4"	ESF018 - EPF018	700 mm	550 mm	1.750 mm	230/1/50-60	155 Kg
ECK 5500/20	5.500 L/min	330 m³/h	1"	ESF040 - EPF040	800 mm	600 mm	1.400 mm	230/1/50-60	175 Kg
ECK 6500/20	6.500 L/min	390 m³/h	1"	ESF040 - EPF040	800 mm	600 mm	1.600 mm	230/1/50-60	190 Kg
ECK 8000/20	8.000 L/min	480 m³/h	1"	ESF040 - EPF040	800 mm	600 mm	1.800 mm	230/1/50-60	210 Kg
ECK 9000/20	9.000 L/min	540 m³/h	1"	ESF075 - EPF075	800 mm	600 mm	2.000 mm	230/1/50-60	235 Kg
ECK 10500/20	10.500 L/min	630 m³/h	1"	ESF075 - EPF075	950 mm	650 mm	1.600 mm	230/1/50-60	295 Kg
ECK 12500/20	12.500 L/min	750 m³/h	1 1/2"	ESF075 - EPF075	950 mm	650 mm	1.850 mm	230/1/50-60	325 Kg
ECK 15000/20	15.000 L/min	900 m³/h	1 1/2"	ESF075 - EPF075	1.050 mm	700 mm	1.650 mm	230/1/50-60	360 Kg
ECK 18000/20	18.000 L/min	1.080 m³/h	1 1/2"	ESF075 - EPF110	1.050 mm	700 mm	1.850 mm	230/1/50-60	400 Kg
ECK 20000/20	20.000 L/min	1.200 m³/h	2"	ESF160 - EPF160	1.050 mm	700 mm	2.150 mm	230/1/50-60	440 Kg
ECK 24000/20	24.000 L/min	1.440 m³/h	2"	ESF160 - EPF160	1.160 mm	750 mm	1.700 mm	230/1/50-60	505 Kg
ECK 27000/20	27.000 L/min	1.620 m³/h	2"	ESF160 - EPF160	1.160 mm	750 mm	1.900 mm	230/1/50-60	560 Kg
ECK 32000/20	32.000 L/min	1.920 m³/h	2"	ESF210 - EPF210	1.300 mm	750 mm	1.900 mm	230/1/50-60	720 Kg
ECK 38000/20	38.000 L/min	2.280 m³/h	2"	ESF210 - EPF160	1.300 mm	750 mm	2.100 mm	230/1/50-60	780 Kg

Correction Factor									
Temp. °C	<20	25	30	35	38	40	45	48	50
Tk	1,20	1,10	1,09	1,00	0,84	0,78	0,72	0,65	0,58

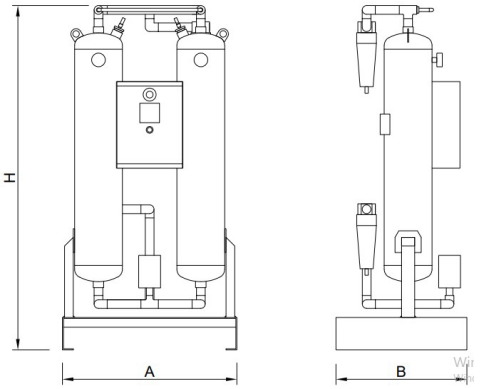

NOTES

- Compressed Air Flow: 20 °C (1 bar Free Normal Air
- Calculated Air Temperature: 35 °C (Correction Factor)
- Max. Operating Pressure: 20 bar
- Design Pressure: 20 bar
- Dew Point: -40 °C
- Max. Ambient Temperature: 50 °C
- Max. Air Temperature: 50 °C
- Standard Accessories:**Inlet and Outlet Filters Included**
- Power Requirement: 230 V, 1 ph, 50–60 Hz

ECK PLUS SERIES / 20 BAR

Heatless Desiccant Air Dryer With Integrated Activated Carbon Tower

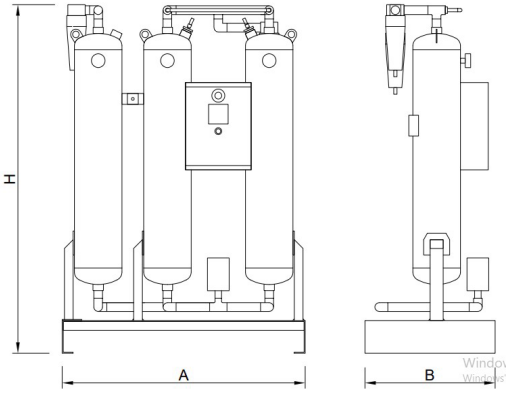

NOTES

- Compressed Air Flow: 20 °C (1 bar Free Normal Air
- Calculated Air Temperature: 35 °C (Correction Factor)
- Max. Operating Pressure: 20 bar
- Design Pressure: 20 bar
- Dew Point: -40 °C
- Max. Ambient Temperature: 50 °C
- Max. Air Temperature: 50 °C
- Standard Accessories:**Inlet and Outlet Filters Included**
- Power Requirement: 230 V, 1 ph, 50–60 Hz

20 BAR ECK PLUS SERIES DESICCANT AIR DRYER WITH INTERGRATED ACTIVATED CABON TOWER

MODEL	Capacity		Conn. Size	Filter Type Inlet–Outlet	Dimensions			Voltage V/ph/Hz	Weight
	NL/min	Nm³/h			A	B	H		
ECK 1500/20	1.500 L/min	90 m³/h	1/2"	ESF014 - EPF014	900 mm	550 mm	950 mm	230/1/50-60	120 Kg
ECK 2400/20	2.400 L/min	144 m³/h	1/2"	ESF014 - EPF014	900 mm	550 mm	1.150 mm	230/1/50-60	140 Kg
ECK 3000/20	3.000 L/min	180 m³/h	1/2"	ESF014 - EPF014	700 mm	550 mm	1.350 mm	230/1/50-60	165 Kg
ECK 3700/20	3.700 L/min	225 m³/h	3/4"	ESF018 - EPF018	700 mm	550 mm	1.550 mm	230/1/50-60	190 Kg
ECK 4500/20	4.500 L/min	270 m³/h	3/4"	ESF018 - EPF018	700 mm	550 mm	1.750 mm	230/1/50-60	210 Kg
ECK 5500/20	5.500 L/min	330 m³/h	1"	ESF040 - EPF040	800 mm	600 mm	1.400 mm	230/1/50-60	230 Kg
ECK 6500/20	6.500 L/min	390 m³/h	1"	ESF040 - EPF040	800 mm	600 mm	1.600 mm	230/1/50-60	260 Kg
ECK 8000/20	8.000 L/min	480 m³/h	1"	ESF040 - EPF040	800 mm	600 mm	1.800 mm	230/1/50-60	300 Kg
ECK 9000/20	9.000 L/min	540 m³/h	1"	ESF075 - EPF075	800 mm	600 mm	2.000 mm	230/1/50-60	320 Kg
ECK 10500/20	10.500 L/min	630 m³/h	1"	ESF075 - EPF075	950 mm	650 mm	1.600 mm	230/1/50-60	385 Kg
ECK 12500/20	12.500 L/min	750 m³/h	1 1/2"	ESF075 - EPF075	950 mm	650 mm	1.850 mm	230/1/50-60	430Kg
ECK 15000/20	15.000 L/min	900 m³/h	1 1/2"	ESF075 - EPF075	1.050 mm	700 mm	1.650 mm	230/1/50-60	480 Kg
ECK 18000/20	18.000 L/min	1.080 m³/h	1 1/2"	ESF075 - EPF110	1.050 mm	700 mm	1.850 mm	230/1/50-60	535 Kg
ECK 20000/20	20.000 L/min	1.200 m³/h	2"	ESF160 - EPF160	1.050 mm	700 mm	2.150 mm	230/1/50-60	575 Kg
ECK 24000/20	24.000 L/min	1.440 m³/h	2"	ESF160 - EPF160	1.160 mm	750 mm	1.700 mm	230/1/50-60	685 Kg
ECK 27000/20	27.000 L/min	1.620 m³/h	2"	ESF160 - EPF160	1.160 mm	750 mm	1.900 mm	230/1/50-60	810 Kg
ECK 32000/20	32.000 L/min	1.920 m³/h	2"	ESF210 - EPF210	1.900 mm	750 mm	1.900 mm	230/1/50-60	960 Kg
ECK 38000/20	38.000 L/min	2.280 m³/h	2"	ESF210 - EPF210	1.900 mm	750 mm	2.100 mm	230/1/50-60	1150 Kg

Correction Factor									
Temp. °C	<20	25	30	35	38	40	45	48	50
Tk	1,20	1,10	1,09	1,00	0,84	0,78	0,72	0,65	0,58

ECK SERIES / 40 BAR

Heatless Desiccant Air Dryer

40 BAR ECK SERIES HEATLESS DESICCANT AIR DRYER									
MODEL	Capacity		Conn. Size	Filter Type Inlet–Outlet	Dimensions			Voltage V/ph/Hz	Weight
	NL/min	Nm³/h			A	B	H		
ECK 3000/40	3.000 L/min	180 m³/h	1/2"	EHPSF050 - EHPPF050	700 mm	550 mm	950 mm	230/1/50-60	105 Kg
ECK 4800/40	4.800 L/min	288 m³/h	1/2"	EHPSF050 - EHPPF050	700 mm	550 mm	1.150 mm	230/1/50-60	125 Kg
ECK 6000/40	6.000 L/min	360 m³/h	1/2"	EHPSF050 - EHPPF050	700 mm	550 mm	1.350 mm	230/1/50-60	150 Kg
ECK 7500/40	7.500 L/min	450 m³/h	3/4"	EHPSF100 - EHPPF100	700 mm	550 mm	1.550 mm	230/1/50-60	175 Kg
ECK 9000/40	9.000 L/min	540 m³/h	3/4"	EHPSF100 - EHPPF100	700 mm	550 mm	1.750 mm	230/1/50-60	190 Kg
ECK 11000/40	11.000 L/min	660 m³/h	1"	EHPSF150 - EHPPF150	800 mm	600 mm	1.400 mm	230/1/50-60	220 Kg
ECK 13000/40	13.000 L/min	780 m³/h	1"	EHPSF150 - EHPPF150	800 mm	600 mm	1.600 mm	230/1/50-60	250 Kg
ECK 16000/40	16.000 L/min	960 m³/h	1"	EHPSF200 - EHPPF200	800 mm	600 mm	1.800 mm	230/1/50-60	280 Kg
ECK 18000/40	18.000 L/min	1.080 m³/h	1"	EHPSF200 - EHPPF200	800 mm	600 mm	2.000 mm	230/1/50-60	310 Kg

Correction Factor									
Temp. °C	<20	25	30	35	38	40	45	48	50
Tk	1,20	1,10	1,09	1,00	0,84	0,78	0,72	0,65	0,58

NOTES

·Compressed Air Flow: 20 °C (1 bar Free Normal Air
·Calculated Air Temperature: 35 °C (Correction Factor)
·Max. Operating Pressure: 40 bar
·Design Pressure: 40 bar
·Dew Point: -40 °C
·Max. Ambient Temperature: 50 °C
·Max. Air Temperature: 50 °C
·Standard Accessories:**Inlet and Outlet Filters Included**
·Power Requirement: 230 V, 1 ph, 50–60 Hz

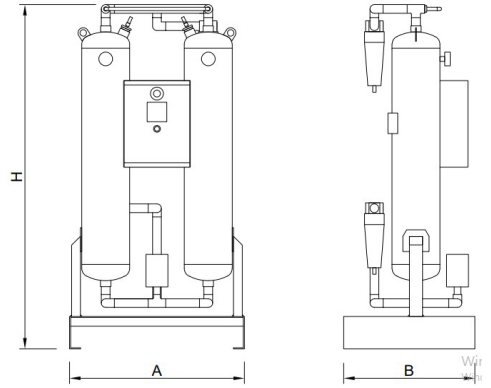

ECK PLUS SERIES / 40 BAR

Heatless Desiccant Air Dryer With Integrated Activated Carbon Tower

40 BAR ECK PLUS SERIES HEATLESS DESICCANT AIR DRYER WITH INTEGRATED ACTIVATED CARBON TOWER									
MODEL	Capacity		Conn. Size	Filter Type Inlet–Outlet	Dimensions			Voltage V/ph/Hz	Weight
	NL/min	Nm³/h			A	B	H		
ECK 3000/40	3.000 L/min	180 m³/h	1/2"	EHPSF050 - EHPPF050	900 mm	550 mm	950 mm	230/1/50-60	150 Kg
ECK 4800/40	4.800 L/min	288 m³/h	1/2"	EHPSF050 - EHPPF050	900 mm	550 mm	1.150 mm	230/1/50-60	180 Kg
ECK 6000/40	6.000 L/min	360 m³/h	1/2"	EHPSF050 - EHPPF050	960 mm	550 mm	1.350 mm	230/1/50-60	210 Kg
ECK 7500/40	7.500 L/min	450 m³/h	3/4"	EHPSF100 - EHPPF100	960 mm	550 mm	1.550 mm	230/1/50-60	240 Kg
ECK 9000/40	9.000 L/min	540 m³/h	3/4"	EHPSF100 - EHPPF100	960 mm	550 mm	1.750 mm	230/1/50-60	265 Kg
ECK 11000/40	11.000 L/min	660 m³/h	1"	EHPSF150 - EHPPF150	1.120 mm	600 mm	1.400 mm	230/1/50-60	305 Kg
ECK 13000/40	13.000 L/min	780 m³/h	1"	EHPSF150 - EHPPF150	1.120 mm	600 mm	1.600 mm	230/1/50-60	350 Kg
ECK 16000/40	16.000 L/min	960 m³/h	1"	EHPSF200 - EHPPF200	1.120 mm	600 mm	1.800 mm	230/1/50-60	390 Kg
ECK 18000/40	18.000 L/min	1.080 m³/h	1"	EHPSF200 - EHPPF200	1.120 mm	600 mm	2.000 mm	230/1/50-60	435 Kg

Correction Factor									
Temp. °C	<20	25	30	35	38	40	45	48	50
Tk	1,20	1,10	1,09	1,00	0,84	0,78	0,72	0,65	0,58

NOTES

- Compressed Air Flow: 20 °C (1 bar Free Normal Air
- Calculated Air Temperature: 35 °C (Correction Factor)
- Max. Operating Pressure: 40 bar
- Design Pressure: 40 bar
- Dew Point: -40 °C
- Max. Ambient Temperature: 50 °C
- Max. Air Temperature: 50 °C
- Standard Accessories:**Inlet and Outlet Filters Included**
- Power Requirement: 230 V, 1 ph, 50–60 Hz

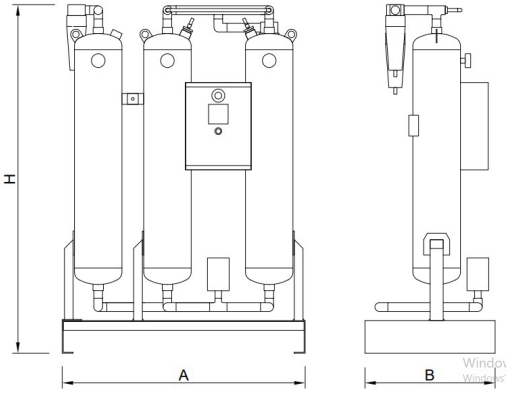

ecerkom

Activated Carbon Tower

Our activated carbon towers are designed for high-efficiency filtration, targeting the removal of impurities and odors that can compromise product quality. Our towers utilize a high-surface-area carbon media housed within a robust cylindrical design to facilitate a superior adsorption process. This specialized filtration technology provides a reliable and effective barrier against contaminants, ensuring your operations meet the most stringent purity and safety standards.

Operating Principle

The operating principle of activated carbon towers is based on the adsorption method.

- **Inlet:** Contaminants enter the tower through a controlled intake system designed for optimal contact time.
- **Filtration:** The medium passes through high-density activated carbon, where the porous surface area traps harmful components at a molecular level. This results in a highly efficient separation of impurities.
- **Purify Outlet:** The process concludes with the delivery of a clean, odor-free, and high-purity output, ready for immediate industrial use.

Activated Carbon Tower Features

- **Oil and Odor Removal:** The activated carbon tower filters oil vapors and odors from compressed air, providing air that is both oil-free and odorless.
- **Saturation Time:** The activated carbon continues its filtration function until it reaches saturation. Once saturated, the activated carbon needs to be replaced.
- **Easy Installation:** To install the activated carbon tower, it only needs to be connected to the compressed air system.
- **High Durability:** It demonstrates long-lasting durability when exposed to high levels of oil vapor.







ECT SERIES

Activated Carbon Tower

ECT ACTIVATED CARBON TOWER							
MODEL	Capacity		Conn. Size	Dimensions		16 Bar Weight	40 Bar Weight
	NL/min	Nm³/h		A	B		
ECT 60	1000 L/min	60 m³/h	1/2"	1.050 mm	220 mm	27 Kg	35 Kg
ECT 90	1.500 L/min	90 m³/h	3/4"	1.350 mm	220 mm	35 Kg	47 Kg
ECT 110	1.830 L/min	110 m³/h	3/4"	1.550 mm	220 mm	41 Kg	55 Kg
ECT 130	2.170 L/min	130 m³/h	3/4"	1.750 mm	220 mm	47 Kg	62 Kg
ECT 160	2.670 L/min	160 m³/h	1"	1.400 mm	280 mm	50 Kg	73 Kg
ECT 180	3.000 L/min	180 m³/h	1"	1.600 mm	280 mm	58 Kg	86 Kg
ECT 215	3.580 L/min	215 m³/h	1"	1.800 mm	280 mm	65 Kg	100 Kg
ECT 240	4.000 L/min	240 m³/h	1 1/2"	1.400 mm	345 mm	70 Kg	110 Kg
ECT 300	5.000 L/min	300 m³/h	1 1/2"	1.600 mm	345 mm	81 Kg	130 Kg
ECT 340	5.670 L/min	340 m³/h	1 1/2"	1.400 mm	400 mm	90 Kg	140 Kg
ECT 420	7.000 L/min	420 m³/h	1 1/2"	1.600 mm	400 mm	105 Kg	165 Kg
ECT 490	8.170 L/min	490 m³/h	2"	1.800 mm	400 mm	120 Kg	190 Kg
ECT 690	11.500 L/min	690 m³/h	2"	1.580 mm	460 mm	145 Kg	200 Kg
ECT 780	13.000 L/min	780 m³/h	2"	1.780 mm	460 mm	165 Kg	230 Kg
ECT 960	16.000 L/min	960 m³/h	2"	1.700 mm	580 mm	205 Kg	275 Kg
ECT 1140	19.000 L/min	1.140 m³/h	3"	1.950 mm	580 mm	240 Kg	320 Kg
ECT 1380	23.000 L/min	1.380 m³/h	3"	2.200 mm	580 mm	275 Kg	375 Kg
ECT 1560	26.000 L/min	1.560 m³/h	3"	1.750 mm	700 mm	330 Kg	440 Kg
ECT 1800	30.000 L/min	1.800 m³/h	3"	1.950 mm	700 mm	375 Kg	500 Kg
ECT 2280	38.000 L/min	2.280 m³/h	3"	2.250 mm	700 mm	440 Kg	590 Kg
ECT 2820	47.000 L/min	2.820 m³/h	3"	2.750 mm	700 mm	553 Kg	745 Kg
ECT 3300	55.000 L/min	3.300 m³/h	4"	1.910 mm	975 mm	660 Kg	880 Kg
ECT 4020	67.000 L/min	4.020 m³/h	4"	2.160 mm	975 mm	770 Kg	1.025 Kg
ECT 4680	78.000 L/min	4.680 m³/h	4"	2.410 mm	975 mm	875 Kg	1.170 Kg

Correction Factor												
Pres. (Bar)	4,0	5,0	6,0	7,0	8,0	9,0	10,0	12,0	16,0	20,0	30,0	40,0
Pk	0,60	0,74	0,89	1,00	1,11	1,22	1,36	1,63	2,14	2,58	3,85	4,90

Temp. °C	<20	25	30	35	38	40	45	48	50
Tk	1,20	1,10	1,09	1,00	0,84	0,78	0,72	0,65	0,58

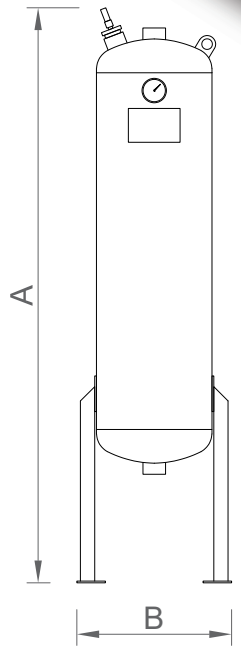

NOTES

·Compressed Air Flow: 20 °C (1 bar Free Normal Air)
·Calculated Air Temperature: 35 °C (Correction Factor)
·Max. Operating Pressure: -40 bar
·Design Pressure: 7 bar
·Max. Ambient Temperature: 50 °C
·Max. Air Temperature: 50 °C
·Standard Accessories: **Safety Valve and Pressure Gauge Included.**

Sample Product Selection:

If the required capacity is 1800 Nl/min and the system operates at 9 bar pressure with an inlet temperature of 45 °C, the ECT is selected as follows:
1800 / 1.22 / 0.72 = 2049.18 Nl/min
The correct Activated Carbon Tower model to be selected is ECT-130.

Compressed Air Quality

ECERKOM activated carbon towers provide compressed air at ISO 8573 Class 1 (oil) quality.
This is a critical factor for ensuring high-standard air quality in industrial applications.

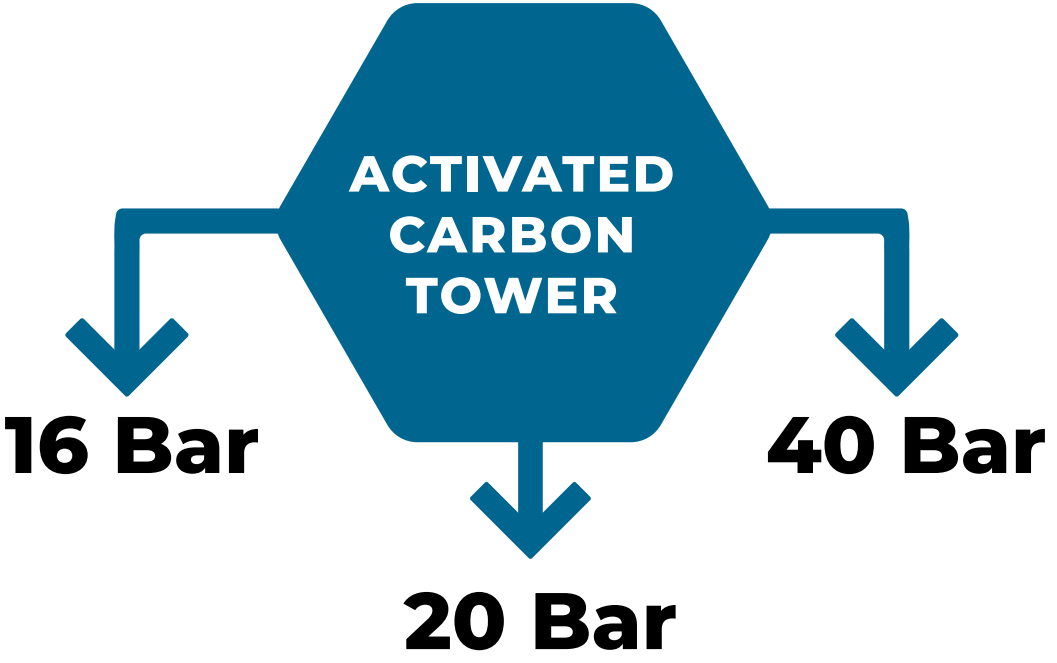

ecerkom

ECND SERIES WATER SEPARATORS

- Ecerkom ECND Series water separators are specially designed to remove condensed liquid water and residues from compressed air and gases using centrifugal force.
- To achieve maximum efficiency and energy savings, the centrifugal effect created by the vanes with minimal pressure loss separates water and oil-like contaminants from compressed air and gases.
- Ecerkom water separator and condensate trap series are manufactured in series with threaded connections ranging from 1/2'' to 3'' and capacities from 100 m³/h to 3000 m³/h.

Dimensions					
MODEL	Flow Rate		Connection	Ø (mm)	H (mm)
	m³/Hour	L/min			
ECND015	100	1.667	1/2”	95	275
ECND020	200	3.350	1/2”	95	275
ECND050	300	5.000	1”	120	310
ECND100	600	10.000	1 1/2”	120	410
ECND200	1.200	20.000	2”	175	550
ECND300	1.800	30.000	3”	210	635
ECND500	1.600	50.000	3”	210	795

Maximum Operating Temperature	80°C
Minimum Operating Temperature	2°C
Pressure Loss	20 mbar
Maximum Operating Pressure	16 Bar

ECNDF SERIES WATER SEPARATORS

- Ecerkom ECNDF Series water separators are specially designed to remove condensed liquid water and residues from compressed air and gases using centrifugal force.
- To achieve maximum efficiency and energy savings, the centrifugal effect created by the vanes with minimal pressure loss separates water and oil-like contaminants from compressed air and gases.
- Ecerkom ECNDF Series water separators and condensate trap series are manufactured in series with DN100–DN150 connections and capacities ranging from 3,600 m^3/h to 7,200 m^3/h.
- Production with higher capacities and custom designs is possible upon customer request.
- Mechanical automatic drain is standard on all products.

ecerkom

ECNDF Series Water Separators Technical Specifications

MODEL	Connection	Capacity		Dimensions						Weight	Drain
		L/min.	m³/hour	A	B	C	D	E	F		
ECNDF0600	D100	60.000	3.600	450	950	220	75	273	740	56 kg	1/2”
ECNDF0800	D125	80.000	4.800	500	950	220	75	323	760	68 kg	1/2”
ECNDF1200	D150	120.000	7.200	600	1050	285	75	450	800	96 kg	1/2”

Maximum Operating Temperature	80°C
Minimum Operating Temperature	2°C
Maximum Operating Pressure	14 Bar
Pressure Loss	40 Mbar

For a more effective and efficient water separation process, it is recommended to use compressed air filters and air dryers in our systems.

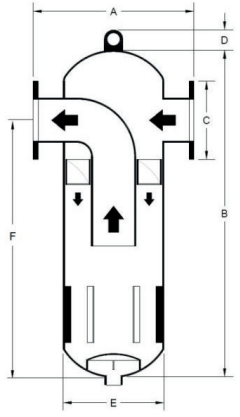

Correction Factor								
Operating Pressure (Bar)	1	3	5	7	9	11	13	14
Correction Factor	0,50	0,72	0,87	1,00	1,12	1,23	1,32	1,38

To find the most suitable model for your system, please multiply your capacity by the correction factor corresponding to your operating pressures provided in the table beside.

EFCF SERIES FLANGED AIR FILTERS

According to ISO 8573-1:2010, every compressed air system requires a specific class of air quality. Ecerkom offers the necessary filtration solutions for high-flow, critical compressed air processes with flanged compressed air filters in four different series and various standards, providing different filter combinations to meet your requirements.

- Bodies compliant with CE standards. Budget-friendly custom design. Best price/performance ratio among filters of this capacity.
- Combined with F Series filters, reinforced, high-strength welded design,
- Threaded F Series housings that facilitate element replacement and maintenance,
- Optimal service life and minimum cost with a low number of elements,
- Corrosion-resistant manifolds and alloy aluminum housings coated inside and out with electrostatic paint,
- Standard equipment includes a float-type mechanical automatic drain and a differential pressure contamination indicator,
- Filter elements manufactured according to ISO 8573-1 standards,
- Elements with plastic top and bottom caps sealed with epoxy adhesive, resistant to heavy-duty conditions and sudden pressure changes,
- Four different element series to meet the various air quality requirements of your system,
- Easy replacement with a single stud, very high corrosion resistance,
- Minimum pressure loss with expanded flow path design,
- All elements are always available in stock.

ecerkom

ECFF Series Filters Technical Specifications

MODEL	Connection	Capacity		Operating Temp.		Operating Pressure		Filter Element Replacement			
		L/min	m³/hour	Max.	Min.	Max.	Min.	Model	Piece	Hour	P (Bar)
EFCF 600	D100	60.000	3.600	65 °C	2 °C	16 Bar	2 Bar	EF300	2	2	0,7
EFCF 800	D125	80.000	4.800	65 °C	2 °C	16 Bar	2 Bar	EF300	2	2	0,7
EFCF 1000	D150	120.000	7.200	65 °C	2 °C	16 Bar	2 Bar	EF500	2	2	0,7

Correction Factor	0,5	0,72	0,87	1	1,06	1,12	1,22	1,32	1,44
Bar	1	3	5	7	8	9	11	13	15
Psi	15	44	73	100	116	131	160	189	218

ecerkom

Element Type / Element Description	Unit	EOF Series General Purpose Pre-Filter	ESF Series Water & Oil Separator Filter	EPF Series Precision Particle Filter	ECF Series Activated Carbon Filter	ESCF Series Sterile Filter
Particle Separation	micron	3	0,1	0,01	-	0,01
Oil Carryover (at 21 °C)	mg/m³	-	0,1	0,01	0,003	0,01
Pressure Drop / New & Dry	mbar	35	60	80	60	80
Pressure Drop During Replacement	mbar	700	700	700	6-month period	6-month period

EFF SERIES FLANGED AIR FILTERS

- Reinforced, high-strength welded design with CE-compliant bodies,
- Top-cover body design that facilitates element replacement and maintenance,
- Optimal service life and minimum cost with a low number of elements,
- Corrosion-resistant body coated inside and out with electrostatic paint,
- Standard equipment includes a float-type mechanical automatic drain,



ecerkom

EFF Series Flanged Filters Technical Specifications

EFF Series Flanged Filter Dimensions						
MODEL	Flow Rate		Connection	Ø (mm)	H (mm)	W (mm)
	m³/hour	L/min				
EFF600	3.600	60.000	DN100	490	1190	600
EFF800	4.800	80.000	DN125	490	1340	600
EFF1000	6.000	100.000	DN150	490	1445	600
EFF1200	7.500	125.000	DN150	580	1515	720
EFF1500	9.000	150.000	DN150	580	1550	720
EFF2000	12.000	200.000	DN200	840	1550	750
EFF2500	15.000	250.000	DN200	840	1650	750

MODEL	Connection	Flow Rate		Operating Temp.		Operating Pressure		Filter Element Replacement			
		L/min	m³/hour	Max.	Min.	Max.	Min.	Model	Piece	Hour	△P (Bar)
EFF 600	DN100	60.000	3.600	65 °C	2 °C	16 Bar	2 Bar	EFF300	2	3.500	0,7
EFF 800	DN125	80.000	4.800	65 °C	2 °C	16 Bar	2 Bar	EFF400	2	3.500	0,7
EFF 1000	DN150	100.000	6.000	65 °C	2 °C	16 Bar	2 Bar	EFF500	2	3.500	0,7
EFF 1200	DN150	125.000	7.500	65 °C	2 °C	16 Bar	2 Bar	EFF400	3	3.500	0,7
EFF 1500	DN150	150.000	9.000	65 °C	2 °C	16 Bar	2 Bar	EFF500	3	3.500	0,7
EFF 2000	DN200	200.000	12.000	65 °C	2 °C	16 Bar	2 Bar	EFF500	4	3.500	0,7
EFF 2500	DN200	250.000	15.000	65 °C	2 °C	16 Bar	2 Bar	EFF500	5	3.500	0,7

Correction Factor	0,5	0,72	0,87	1	1,06	1,12	1,22	1,32	1,44
Bar	1	3	5	7	8	9	11	13	15
Psi	15	44	73	100	116	131	160	189	218

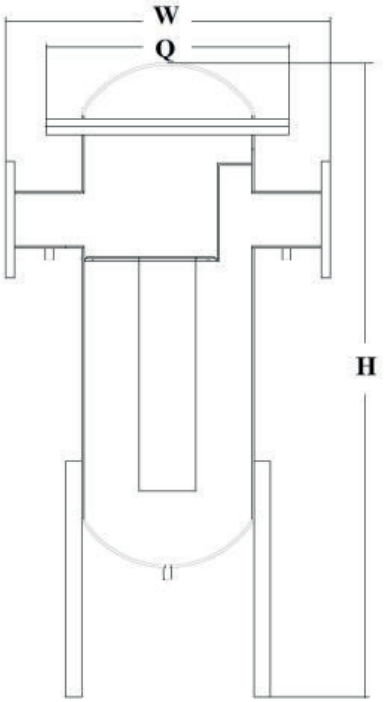

ecerkom

Element Type / Element Description	Unit	EOF Series General Purpose Pre-Filter	ESF Series Water & Oil Separator Filter	EPF Series Precision Particle Filter	ECF Series Activated Carbon Filter	ESCF Series Sterile Filter
Particle Separation	micron	3	0,1	0,01	-	0,01
Oil Carryover (at 21 °C)	mg/m^3	-	0,1	0,01	0,003	0,01
Pressure Drop / New & Dry	mbar	35	60	80	60	80
Pressure Drop During Replacement	mbar	700	700	700	6-month period	6-month period

EF SERIES COMPRESSED AIR FILTERS

According to ISO 8573-1:2010, every compressed air system requires a specific class of air quality. Ecerkom offers the necessary filtration solutions for critical compressed air processes with filters in five different series and various standards, providing different filter combinations to meet your requirements.

Ecerkom EOF Series:

- General-purpose filter for pre-filtration,
- Particle filtration down to 3 microns,
- Optimal service life and minimum cost with a low number of elements,

Applications and Usage Areas:

- Placed before refrigerated dryers and vacuum pumps.
- Effective in dust retention/filtration.
- Provides basic protection.

Ecerkom ESF Series:

- General-Purpose Filter / Inlet Filter,
- Particle filtration down to 0.1 micron,
- Oil vapor filtration: 0.1 mg/m³ at a reference temperature of 20 °C,

Ecerkom ECF Series:

- Activated carbon filter,
- Used together with PF series for odor filtration.
- Oil vapor filtration: 0.003 mg/m³ at a reference temperature of 20 °C

Applications and Usage Areas:

- Installed after PF series filters.
- Used in packaging and production lines in the food industry,
- For respiratory air production and devices in the healthcare sector,
- In highly specific and sensitive industrial equipment.
- Mounted at the inlet of refrigerated or chemical dryers.
- Effective in retaining dust and oil.
- Used in lines where pneumatic tools and pumps are operated.

Ecerkom PF Series:

- Particle filtration down to 0.01 micron,
- Oil vapor filtration: 0.01 mg/m³ at a reference temperature of 20 °C

Applications and Usage Areas:

- Installed at the outlet of refrigerated dryers.
- Highly effective in retaining dust and oil.
- Used in spray paint lines, pneumatic conveyor lines, food production lines, precision measuring instruments, medical breathing devices, and other similar processes and equipment.

Ecerkom ESCF Series:

- Precision Sterile Outlet Filter,
- Particle filtration down to 0.1 micron,
- Oil vapor filtration: 0.1 mg/m³ at a reference temperature of 20 °C,

ecerkom	Element Type / Element Description	Unit	EOF Series General Purpose Pre-Filter	ESF Series Water & Oil Separator Filter	EPF Series Precision Particle Filter	ECF Series Activated Carbon Filter	ESCF Series Sterile Filter
	Particle Separation	micron	3	0,1	0,01	-	0,01
	Oil Carryover (at 21 °C)	mg/m³	-	0,1	0,01	0,003	0,01
	Pressure Drop / New & Dry	mbar	35	60	80	60	80
	Pressure Drop During Replacement	mbar	700	700	700	6-month period	6-month period

Correction Factor	0,5	0,72	0,87	1	1,06	1,12	1,22	1,32	1,44
Bar	1	3	5	7	8	9	11	13	15
Psi	15	44	73	100	116	131	160	189	218

Compressed Air Filters Technical Specifications

MODEL	Connection	Capacity		Operating Temp.		Operating Pressure		Filter Element Replacement		
		L/min.	m³/hour	Max.	Min.	Max.	Min.	Model	Hour	△P (Bar)
EF014	1/2”	1.450	87	80 °C	2 °C	16 Bar	2 Bar	EEF014	3.500	0,7
EF018	3/4”	1.800	108	80 °C	2 °C	16 Bar	2 Bar	EEF018	3.500	0,7
EF030	1”	3.000	180	80 °C	2 °C	16 Bar	2 Bar	EEF030	3.500	0,7
EF040	1”	4.000	240	80 °C	2 °C	16 Bar	2 Bar	EEF040	3.500	0,7
EF060	1 1/2”	6.000	360	80 °C	2 °C	16 Bar	2 Bar	EEF060	3.500	0,7
EF075	1 1/2”	7.500	450	80 °C	2 °C	16 Bar	2 Bar	EEF075	3.500	0,7
EF0110	1 1/2”	11.000	660	80 °C	2 °C	16 Bar	2 Bar	EEF0110	3.500	0,7
EF0160	2”	15.000	900	80 °C	2 °C	16 Bar	2 Bar	EEF0160	3.500	0,7
EF0210	2”	20.000	1.200	80 °C	2 °C	16 Bar	2 Bar	EEF0210	3.500	0,7
EF0300	3”	30.000	1.800	80 °C	2 °C	16 Bar	2 Bar	EEF0300	3.500	0,7
EF0400	3”	40.000	2.400	80 °C	2 °C	16 Bar	2 Bar	EEF0400	3.500	0,7
EF0500	3”	50.000	3.000	80 °C	2 °C	16 Bar	2 Bar	EEF0500	3.500	0,7

ecerkom

Compressed Air Filters Features

- Our compressed air filters feature premium aluminum die-cast bodies, engineered for long-term corrosion resistance and industrial-grade reliability.
- An electrostatic powder-coated exterior provides a robust shield against the elements, making our filters ideal for both indoor and outdoor installations.
- While a manual drain is standard, Ecerkom offers optional float-type and timed solenoid automatic drains to streamline your condensate management.
- A Differential Pressure Contamination Indicator can be mounted on all models upon request.

Compressed Air Filters Technical Specifications

Compressed Air Filters Dimensions and Weights						
MODEL	Flow Rate		Connection	Ø(mm)	H(mm)	Weight (kg)
	m^3/hour	L/min				
EF014	87	1.450	1/2”	95	275	1.240
EF018	108	1.800	3/4”	95	275	1.322
EF030	180	3.000	1”	120	300	2.155
EF040	240	4.000	1”	120	300	2.214
EF060	360	6.000	1 1/2”	120	400	2.396
EF075	450	7.500	1 1/2”	120	400	2.416
EF0110	660	11.000	1 1/2”	120	565	4.100
EF0160	900	15.000	2”	175	570	6.998
EF0210	1.200	20.000	2”	175	695	8.274
EF0300	1.800	30.000	3”	210	655	9.188
EF0400	2.400	40.000	3”	210	815	10.980
EF0500	3.000	50.000	3”	210	980	12.366



- Filter dimensions and weights apply to standard filters with manual drains and without a contamination indicator.

ecerkom

EHP SERIES HIGH-PRESSURE FILTERS

- Ecerkom EHP Series High-Pressure Filters are specifically designed for applications where high-pressure compressors compress air up to 50 bar.
- With high body strength and reliable designs, Ecerkom EHP Series filters are manufactured to be compatible with all high-pressure air applications.
- The 50 bar high-pressure filters of the Ecerkom EHP Series are made from special aluminum alloys with extremely high corrosion resistance and strength, machined on precision CNC machines without welding using subtractive manufacturing methods.
- No silicone is used in the filter elements. Upon request, for highly sensitive processes, filter element caps can be made from aluminum or stainless steel.
- All EHP Series filters feature anodized bodies, maximizing corrosion resistance and extending the life of the filter housings. Manual drains are standard on all models.

Ecerkom EOF Series:

- General-purpose filter for pre-filtration,
- Particle filtration down to 3 microns,
- Effective in dust retention/filtration,
- Provides basic protection.



Ecerkom ESF Series:



- General-purpose filter for pre-filtration,
- Particle filtration down to 1 micron,
- Oil vapor filtration: 0.003 mg/m³ at a reference temperature of 20 °C,
- Effective in retaining dust and oil.

Ecerkom EPF Series:



- Precision Filter Outlet Filter,
- Particle filtration down to 1 micron,
- Oil vapor filtration: 0.003 mg/m³ at a reference temperature of 20 °C,
- Effective in retaining dust and oil.

Ecerkom ECF Series:

- Activated Carbon Filter,
- Particle filtration down to 1 micron,
- Oil vapor filtration: 0.003 mg/m³ at a reference temperature of 20 °C,
- Installed after PF series filters.
- Used in packaging and production lines in the food industry, for respiratory air production and devices in the healthcare sector, and in highly specific and sensitive industrial equipment.

ecerkom

EHPF Series High-Pressure Air Filters
Technical Specifications

MODEL	Connection	Capacity		Operating Temp.		Operating Pressure		Filter Element Replacement		
		L/min.	m³/hour	Max.	Min.	Max.	Min.	Model	Hour	△P (Bar)
EHPF020	1/4”	2.000	120	80 °C	2 °C	80 Bar	2 Bar	EEHPF020	3.500	0,7
EHPF050	1/2”	5.000	300	80 °C	2 °C	80 Bar	2 Bar	EEHPF050	3.500	0,7
EHPF100	3/4”	10.000	600	80 °C	2 °C	80 Bar	2 Bar	EEHPF100	3.500	0,7
EHPF150	1”	15.000	900	80 °C	2 °C	80 Bar	2 Bar	EEHPF150	3.500	0,7
EHPF200	1”	20.000	1.200	80 °C	2 °C	80 Bar	2 Bar	EEHPF200	3.500	0,7
EHPF280	1 1/2”	27.500	1.650	80 °C	2 °C	80 Bar	2 Bar	EEHPF280	3.500	0,7
EHPF430	2”	42.500	2.550	80 °C	2 °C	80 Bar	2 Bar	EEHPF430	3.500	0,7
EHPF500	2 1/2”	50.000	3.000	80 °C	2 °C	80 Bar	2 Bar	EEHPF500	3.500	0,7

Correction Factor	2,43	1,96	1,65	1,41	1,24	1,41	1,24	1,12	1,00
Bar	20	25	30	35	40	35	40	45	50
Psi	290	363	435	507	580	507	580	653	725

EHPF Series Filter Elements Performance Table

ELEMENT SERIES	Particle Filtration	Oil Vapor Filtration	Nom. Pressure Drop (Clean & Dry)	Max. Operating Temperature	Max. Element Replacement Interval
EOF	3 Micron	-	0.04 Bar	80 °C	3.500 Hour
ESF	0.1 Micron	0.1 mg/m³	0.08 Bar	80 °C	3.500 Hour
EPF	0.01 Micron	0.1 mg/m³	0.1 Bar	80 °C	3.500 Hour
ECF	-	0.01 mg/m³	0.1 Bar	80 °C	1.000 Hour

EHP High-Pressure Series Filter Dimensions					
MODEL	Connection	Flow Rate (m³/h)	Flow Rate (L/min)	Outer Diameter (mm) – D	Height (mm) – H
EEHPF020	1/4”	120	2.000	118	155
EEHPF050	1/2”	300	5.000	118	165
EEHPF100	3/4”	600	10.000	118	210
EEHPF150	1”	900	15.000	139	260
EEHPF200	1”	1.200	20.000	139	330
EEHPF280	1 1/2”	1.650	27.000	139	380
EEHPF430	2”	2.550	42.500	158	400
EEHPF500	2 1/2”	3.000	50.000	180	400



Certificates













ecerkom

by ecerkom

ecerkom